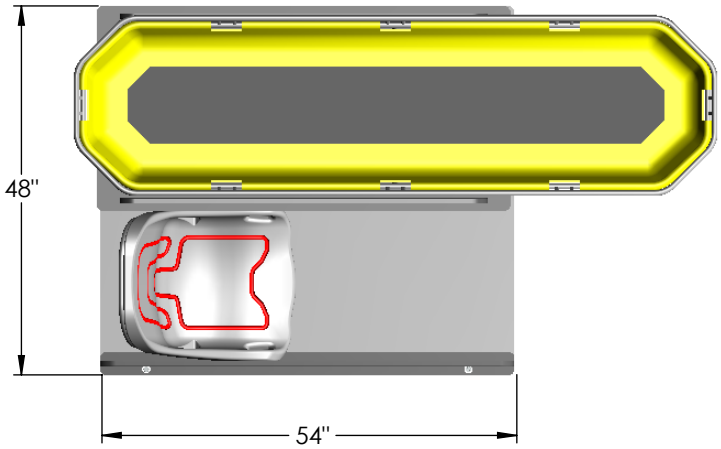
48"
54"

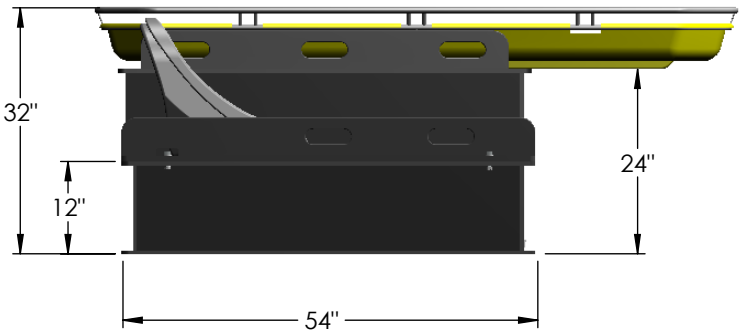
32"
12"
24"
54"